VOL. 7 NOVEMBER 1964 No. 6

metric measures

JOURNAL OF WEIGHTS AND MEASURES

40 PAISE THE PUBLICATIONS DIVISION

ABBREVIATION FOR METRIC UNITS

(1) DECIMAL MULTIPLES AND SUB-MULTIPLES

Prefix		Value in Terms of Unit	Abbreviation
Kilo	..	1,000	k
centi	..	0·01(10^{-2})	c
milli	..	0·001(10^{-3})	m
micro	..	0·000 001(10^{-6})	u

(2) WEIGHTS

Denomination		Value	Abbreviation
tonne	..	1,000 kg	t
quintal	..	100 kg	q
kilogram	..	1 kg	kg
gram	..	1 g	g
milligram	..	1 mg	mg
carat	..	200 mg	c
(3) CAPACITY			
kilolitre	..	1 000 l	kl
litre	..	1 l	l
millilitre	..	1 ml	ml
(4) VOLUME			
cubic metre	..	m^3	m^3 or cu m*
cubic centimetre	..	cm^3	cm^3 or cu cm*
cubic millimetre	..	mm^3	mm^3 or cu mm*
(5) LENGTH			
kilometre	..	1 000 m	km
metre	..	1 m	m
centimetre	..	1 cm	cm
millimetre	..	1 mm	mm
micron	..	1/1 000 mm or 10^{-3} mm	um
(6) AREA			
square kilometre		1 000 000 m^2	km^2 or sq km*
square metre	..	1 m^2	m^2 or sq m*
square centimetre		1 cm^2	cm^2 or sq cm*
square *millimetre*		1 mm^2	mm^2 or sq mm*
(7) LAND MEASURE			
are	..	100 m^2	a
hectare	..	100 a	ha
centiare	..	m^2	ca

*Both these abbreviations are current, but the first set should preferably be used. The former abbreviation is used more commonly internationally than the latter.

Rules for Abbreviations :

(1) Do not make any change, such as addition of 's' to indicate plurality *e.g.*, write 1 kg, 10 kg, 20 g, 5 g, 10 t, 20 ml, 271, 165 km, 2 mm, 100 cm^3, 66 km^2.

(2) Do not capitalize the abbreviations. For example, do not write 1 Kg, 2 Kg, 20 MM, 50 MM; the right way is to write 1 kg, 2 kg, 20 mm, 50 mm, etc.

(3) Do not use any other abbreviations except those given above.

EDITORIAL BOARD

S. L. KUMAR, Former Principal, Patiala Engineering College, Patiala.

U. S. MOHAN RAO, Director, Publications Division, Ministry of Information and Broadcasting, Delhi.

A. NAGARAJA RAO, Adviser, Planning Commission, New Delhi.

P. N. NAYER, Chairman East African Metric Commission Nairobi.

PITAMBAR PANT, Chief, Perspective Planning Division, Planning Commission, New Delhi.

H. L. ROY, Chairman, Indian Decimal Society, Calcutta.

B. N. SASTRI, Deputy Chief Scientific Officer, Defence Science Laboratory, Delhi.

K. V. VENKATACHALAM, Joint Secretary, Ministry of Industry and Supply, New Delhi.

LAL, C. VERMAN, Director, Indian Standards Institution, New Delhi.

V. B. MAINKAR, Director, Weights & Measures. —*Editor*

metric measures

(JOURNAL OF WEIGHTS AND MEASURES)
DIRECTORATE OF WEIGHTS & MEASURES
MINISTRY OF COMMERCE

Vol. 7 NOVEMBER 1964 (KARTIKA 1886) No. 6

CONTENTS

Cost of Adoption of Metric System 3

Medical Thermometer 5
Tatv Darshi Bansal

Weighing Mechanisms in Measurement & Control 12
L. Sanders

News & Views 20

Standards News 23

Licensed Manufacturers and Repairers 29

Cover design by R. Sarangan

Annual Subscription Rs. 2·00   Single Copy 40 Paise

metric measures

METRIC MEASURES is published every two months.

METRIC MEASURES provides information to the general public on the administrative, commercial, educational, industrial, historical and other aspects of weights and measures, with particular reference to the introduction of the metric system in India.

Contributions for publication should be sent to the Editor, METRIC MEASURES, Standing Metric Committee, Ministry of Commerce & Industry, Udyog Bhawan, New Delhi.

Enquiries regarding subscriptions and supply of copies should be addressed to the Business Manager, Publications Division, Ministry of Information and Broadcasting, Old Secretariat, Delhi-6.

Articles published in the Journal may be reproduced. Credit line should read : METRIC MEASURES.

The opinions expressed by authors are not necessarily those of the Government.

Cost of Adoption of Metric System

THE Standards of Weights and Measures Act received the President's assent in December 1956. The Act enjoined Government to enforce the metric system of weights and measures in commercial transactions throughout the country by December 1966. In 1958, metric weights were introduced in trade on a small scale. Later, metric weights and measures were introduced by stages in the whole country. By the end of 1963 the metric system had come into effective use in all commercial transactions.

An attempt has been made to estimate the cost to the Nation in changing its weights and measures. The cost was shared by the Governments both at the Centre and in the States, trade, industry, transport, communications, and by the public at large. The cost can be broadly classified under the following heads:

(1) Replacement of old weights and measures by metric weights and measures.

(2) Conversion of weighing machines.

(3) Cost of State Governments, in enforcing weights and measures, and in adopting the new system in Government departments.

(4) Cost to Central Government departments and undertakings.

(5) Cost to industry.

(6) Miscellaneous costs in sectors such as road-transport, shipping, etc.

(1) Replacement of Weights and Measures

The use of old weights and measures became illegal in certain parts of the country in October 1960. By March 1963, old weights and measures had been almost completely replaced by metric weights and measures throughout the country. Total replacement thus took place during a period of about three years. Every metric weight or measure was verified and stamped by a State Government Inspector before it was released for use in trade. State Governments thus have accurate and complete information on weights and measures which came into use during this period of three years. According to statistics supplied by them, the estimated cost of metric weights and measures which went into circulation during this period was Rs. 72 million. A part of this represented normal replacement of old and worn out weights and measurs which in any case, would have taken place. The normal life span of a commercial weight or measure is about five years. Every year about 20 percent of the weights and measures in circulation are, therefore, replaced. In a period of three years, 60 percent would be replaced in the normal course. Of the new weights and measures which came into circulation during the period April 1960 to March 1963, only about 40 percent represented accelerated replacement due to the introduction of a new system. The expenditure to the nation on this account was Rs. 28.8 million.

(2) Conversion of Weighing Machines

The estimated value of conversion carried out by recognised manufacturers of weighing

machines is Rs. 6.2 million. Of this Rs. 3.7 million represents work done for major industries like iron and steel, cotton textiles, etc., and the balance of Rs. 2.5 million for other industries including small scale industy, road transport, wholesale trade, etc.

(3) Cost to State Governments

Between 1958-59 and 1963-64, the State Governments spent about Rs. 47 million on the enforcement of weights and measures, publicity, training of staff, replacement of weights and measures, conversion of weighing machines in Government departments etc.

4) Cost to Central Government

The estimated expenditure of Central Government departments and undertakings is as follows:

	Rs. in millions
(1) Railways	10·2
(2) Posts & Telegraph	3·0
(3) Publicity	6·9
(4) Transport & Communications	1·0
(5) Other Departments & Undertakings	3·5
Total	24·6

(5) Cost to Industry

According to the Oil Industry Metric Committee, which represents all the oil companies, the oil industry spent Rs. 2.5 million on the conversion of petrol dispensing pumps and other measuring equipment, publicity, training of staff, etc.

The expenditure for other major industries was estimated through sample surveys conducted by the Directorate of Weights and Measures, Ministry of Commerce, Government of India. It was not possible to make such surveys for small industries or for small scale and cottage industries. A broad estimate of Rs. 5 million has been made for these industries. The cost to industry including small scale industry was as follows:

	Rs. in millions
(1) Cotton Textiles	2·0
(2) Jute Textiles	0·8
(3) Sugar	3·6
(4) Cement	0·3
(5) Iron and Steel	0·5
(6) Petroleum	2·5
(7) Tea	2·4
(8) Miscellaneous industries including small scale industry	5·0
Total	17·1

(6) Other Sectors (Including Road Transport)

The cost in these sectors was mainly for conversion of weighing machines and replacement of weights and measures which have been counted under other heads. Expenditure on other items would be relatively small and is estimated at Rs. 2 million.

Total Cost

The total expenditure incurred so far on the reform of weights and measures is roughly as follows:

	Rs. in millions
(1) Replacement of weights and measures	28·8
(2) Recalibration of weighing machines, except in major industries [the cost for major industries is counted in Item (5) below]	2·5
(3) Cost to State Governments	47·0
(4) Cost to Central Government	24·6
(5) Cost to Industry	17·1
(6) Other Sectors	2·0
Total	122·0

The total cost of Rs. 122 million (Rs. 12.2 crores) is modest in relation to the magnitude of the reform and its significance to the country's economy. The reform is, however, not complete since the metric system has yet to be fully adopted in engineering and technology. This is bound to be a slow process and would take considerable time. Further, engineers and technologists throughout the world have to be equally familiar with both systems. It is, therefore, not possible to anticipate a time when the foot-pound system would be completely eliminated from these fields.

Medical Thermometer

TATV DARSHI BANSAL
NATIONAL PHYSICAL LABORATORY,
NEW DELHI.

THE manufacture of medical thermometers started in India during the Second World War. Now it is developing fast. Shortly the industry will be able to meet the country's annual demand of over 20 lakh medical thermometers, and also export them.

The industry, however, faces certain difficulties.

(1) Thermometer tubes have to be imported as Indian tubing has not yet been proved to be good enough.

(2) The usual thermometric liquid, mercury being imported, needs replacement by a suitable indigenous material.

(3) A standard specification for these thermometers for our conditions has yet to be laid down.

The last item is now being taken care of by the Indian Standards Institution and an I.S. Specification for Clinical Thermometers is under publication. Specifications for other varieties of medical thermometers will be taken up gradually.

Varieties of Medical Thermometers

There are many varieties of medical thermometers, each for a different application. The two broad classes are veterinary and those for human use. There are a number of varieties under the second class e.g. doctor's (clinical), premature birth, ladies' etc. The doctor's thermometer can again be oral, rectal or skin type.

Every medical thermometer is based on one of the following principles, arranged in order of increasing 'time lag' or 'time of response':

(1) Thermocouple;
(2) Semiconductor resistance (electrical);
(3) Metallic resistance (electrical);
(4) Thermal expansion of liquid-in-glass; and
(5) Thermal expansion of bimetals, solids, vapours and liquid-in-metal.

Those having lesser time of response are often said to be 'quick reading' or 'fast', while others are classified as 'slow or 'stubby'.

Although thermometers based on liquid-in-glass expansion are the most popular, primarily due to their cheapness and convenient handling, they are fragile and less dependable than the first three varieties. The first three are extensively used in research for study of vaccines, injections, chemicals, bacterial growth, metabolism, etc. They can be used when temperatures of several persons or temperatures at different places of the same person have to be simultaneously measured or recorded. Thermometers based on these three principles are at present very expensive, but their cost would be considerably reduced if a proper use of thermistors, transistors and magic eye is developed, instead of the age-old practice being used today. A differential thermometer based on the thermocouple principle has found much

application during recent years for studying the metabolic rate.

Although one or two manufacturers have developed medical thermometers based on the last principle, their time of response is long and they have not found much favour. More applied research is indicated in this variety.

Anatomical Factors Affecting Design

The bulb shape and dimensions, and sometimes the stem length of the various types of medical thermometers are limited by anatomical features. For example, the oral thermometer should have a bulb which will be fully covered under the axila (armpit) and groin of a new-born child as well as in the cavity below the tongue of an adult. Besides this, it must not be too small to leave appreciable air space when kept in contact with the root of the tongue of an adult.

Generally speaking the design of various types of medical thermometers depends on the following biological conditions:

(1) The size of available space where they have to be applied, depending on the anatomy of the organ;

(2) The temperature range met with under extreme conditions in that application;

(3) The minimum temperature variation whose effect could be appreciated clinically.

The various types have, therefore, different temperature ranges, least counts and bulb sizes.

Popular Types of Medical Thermometers

Due to the extreme cheapness, the liquid-in-glass type medical thermometers are far more popular than any other, almost in every country, so much so that many a doctor and the layman do not even know the others.

In India, as in other countries, the oral thermometers far outnumber all the others. As a result, the medical thermometer industry in India has developed only around the liquid-in-glass type, although there is no difficulty in manufacturing the other varieties with the skill, resources, raw materials and intermediary products now available in the country.

It is well-known how such thermometers are made but before examining the requirements of good medical thermometers, it would be profitable to point out certain important practical aspects of their manufacture and applications, which need particular attention in the present state of the industry in our country.

The Thermometer Tube

The Glass

The range of all medical thermometers is just a few degrees and it is very near the ambient temperature, while the bulb volume is only about 1,000 to 500 times the capillary bore volume as compared to 2,000 and more in the case of other thermometers. Due to the first reason, considerable ease in manufacture could be effected by using lead glasses for medical thermometers.

Tube Drawing

During the last century, thermometer tubes were made in the same way as our bangle makers make the tubes in India i.e. by the manual, horizonal drawing process. The increasing demand of precision gradually made it necessary to fabricate the tubes by automatic processes. The most popular section for medical thermometers is the prismatic or the lens-front section. Considerable improvement can, however, be effected by making the enamel at the back red instead of white, specially when the thermometer is mercury filled.

The tubes are manufactured and tested under very rigid control to ensure accuracy.

Glass Substitutes

There is a possibility of the use of plastics, specially thermoplastics, for fabricating medical thermometers. If and when it is achieved, the whole industry may be revolutionised. In India, we should also investigate this possibility of using plastic tubing.

Methods of Thermometer Manufacture

In the present state of development of the industry in this country, the fused bulb, engraved, solid stem type of construction is far more economical and efficient than any other for medical thermometers, although blown bulb types are also being fabricated.

As long as the glass and the thermometric liquid are of proper quality and the workmanship is fine, there is little to choose between these types except the price of the final product.

It is worthwhile studying some pros and cons of the processes of manufacture from the practical point of view.

Thermometric liquids

The most popular thermometric liquids for medical thermometers are: purest mercury and organic liquids like ethyl alcohol free from ketones and esters. Aviation petrol, kerosene, creosote, pentane, etc. have also been utilized. In order to improve the visibility of the meniscus the organic liquids are dyed with aniline dyes and a fine speck of thullium is sometimes inserted over the mercury surface.

The temperature range of medical thermometers is so small that almost any liquid could be used which does not damage or stick to glass and which does not tend to vaporise or solidify in our climates. Alcohol tends to vaporise in our hot weather and so produces uncertainties in temperature readings while mercury has to be imported. It seems necessary, therefore, to carry out systematic research on this subject for our conditions. Some promising liquids are: carbon tetrachloride, light oils like anisi, aviation petrols and, perhaps, water with some antifreeze agent like glycol, because ambient temperatures in our country (including military operations in the Himalayas) range from about—40°C to plus 55°C. Besides the thermometric properties, such liquids must also allow the use of the maximum indicating device.

Mercury has found greater favour than other liquids because it allows fine annealing of the thermometer glass, shines well, is opaque, has low thermal capacity, uniform expansion, positive surface tension with respect to glass, does not wet glass, can be easily purified to a high order, and does not develop organisms by neglect in manufacture.

Maximum Indicating Devices

Medical thermometers are essentially maximum indicating instruments. Several methods have been utilised for making them register the maximum. The most common method being used is the Hicks constriction. Another common method in Europe is the use of a sealed rod fused inside the bulb and protruding into the capillary. A few examples of maximum indicating devices are shown in Fig. 1.

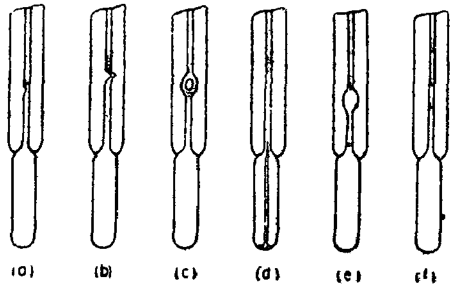

Fig. 1—Examples of maximum indicating devices

The main principle utilised in the case of constrictions in mercury-in-glass thermometers is that the mercury cannot flow freely in glass if the capillary bore is less than 0.007 mm. On the other hand, in the case of the index method, the index either floats on the liquid column or remains attached to its surface by surface tension. A little consideration would show that the bent steel wire index and the constriction methods are the only two choices for medical thermometers.

Constriction devices have two major shortcomings:

(1) They require shaking down before use. Devices to facilitate this hazardous operation are being tried out. For example, the thermometer in case is just whirled round and the liquid goes back into the bulb by centrifugal force. These labour saving devices are likely to become common in the course of time.

(2) Constriction should neither be 'too hard' (requiring very great force for shaking), nor 'too soft', which might enable the liquid to go back into the bulb by slight handling, e.g. in taking out the thermometer from one's mouth for reading. As fabrication of the constriction entirely depends on manual skill, it does not always produce dependable results. About 15 percent of the production is wasted even in well established factories on this account while many more have to be rejected in Indian factories.

Most good medical thermometers require about the same force for shaking down. The International Organization for Standardization (ISO) has suggested that all the liquid must go into the bulb under an acceleration of 500 metres per second. This is, therefore, again a design factor with which we cannot compromise.

Filling

Broadly speaking, the process of 'filling' consists of :

(1) Filling the thermometer liquid in the glass blank ;

(2) Removing moisture and air bubbles from the filled liquid;

(3) Evacuating air from above the liquid column and sometimes replacing it with a chemically neutral gas like nitrogen or carbon dioxide, under pressure (gas filled thermometers); and

(4) Fusing the open end of the glass blank (sealing).

The last operation is too simple and well known. The first three operations are performed either by the 'vacuum chamber method' or by the 'repeated heating and cooling method', the latter being as old as the thermometer industry.

Marking

After 'pointing', i.e. locating 2 or 3 important temperature on the tube, the thermometers have to be 'engraved'. The operations in this process are : graduating, writing letters and numerals, etching and filling the etching with suitable pigment. Broadly speaking, the first three operations of this process are done either by the age-old hydrofluoric acid process, or by the modern sand-blasting process.

What is our normal Temperature?

Human beings are exposed to extremely hot weather in tropics as well as in some industries on the one hand, and to extremely cold weathers in the mountains, Arctic regions, during accidents in flight, etc. on the other. During these extreme sufferings the internal temperature of a person, without feeling ill, never crosses the narrow zone

of 36·4°C. to 37·6°C. In some medical treatments, however, the temperature of affected parts of the body is either suddenly or gradually raised to kill the maligning tissues and in some others, the temperature is considerably reduced to give rest to the patient.

The statistical average of human temperature lies within 37°±0·3°C. Consequently, some doctors prefer to take 37·0°C (98·6°F), as the normal human temperature, whereas others keep it at 36·9°C (98·4°F). A still different opinion has demanded that the region between 36·6°C and 37·3°C may be marked in the medical thermometers as the normal human temperature. Fig. 2 gives interesting data on human temperature under certain conditions. The doctors' or clinical thermometers should cover this range.

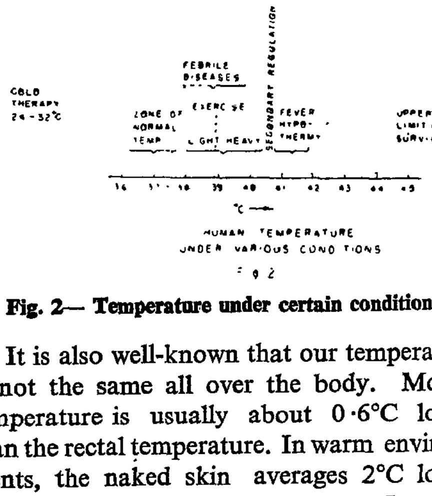

Fig. 2— Temperature under certain conditions

It is also well-known that our temperature is not the same all over the body. Mouth temperature is usually about 0·6°C lower than the rectal temperature. In warm environments, the naked skin averages 2°C lower than the rectal temperature. In cold environments, not quite cold enough to produce chills, it is 6·5°C lower.

If we consider the various factors that affect human temperature, we may conclude that the normal temperature of a human being depends on : conditions of birth, physical environments, chemical actions, biological infections, time of observation and place of application.

One would like to know, in view of the above uncertainties, what is meant by the normal temperature of man. After a great deal of study it has now been possible to define this temperature as that which is obtained between 11 A.M. and 2 P.M. after allowing the person to remain lying in comfortable environments, without practically any physical or mental movement for 24 hours, the last food having been taken at 7 P.M. on the previous evening. This temperature is medically, known as the basal temperature. In our country we come across a very extensive range of climatic conditions and almost every human race. It seems desirable, therefore, to investigate the normal temperatures of human beings belonging to different races and geographical zones living under different climatic conditions. Unless such an investigation is carried out, it may not be quite easy to state a universally acceptable and logical normal temperature of human body for Indian conditions although it is very widely accepted as exactly 37·0°C on the basis of some statistical data collected in London and New York some 60 to 80 years ago.

Special Design Factors for Tropical Countries

The problems of design of medical thermometers, specially to suit Indian conditions, are varied and numerous.

Two difficulties have already been discussed viz. the fixation of normal temperature under our conditions, and the range of temperatures in which human beings, especially Indians would survive under our conditions. Other factors are discussed below.

A clinical thermometer lying in stock or otherwise often loses its calibration appreciably. This can be due to either bad ageing or annealing or due to the fact that our environmental temperatures often exceed the maximum temperature up to which such thermometers can be used. The result is that the liquid column fills up the whole

capillary and then it starts pressing out the bulb. This might permanently change the bulb volume and hence the calibration. This difficulty can be easily overcome by providing a safety chamber at the top of the thermometer, although nobody seems to have utilized this for medical thermometers. An investigation on this aspect is rather important for our conditions. Meanwhile, it might be worthwhile to introduce the above mentioned refinement in our country.

As a result of ambient temperatures often rising far beyond the patient's temperature, it is difficult to read the thermometer soon after it is taken out of the patient under such conditions. On this point, medical opinion seems to be lacking. After a large number of enquiries from medical practitioners it appears that in practice they cool down the thermometer before use in a glass of cold water kept very near the patient and they immerse the thermometer into it immediately after application. The temperature is read while the thermometer is dripping or still ir water. Obviously, this is not a scientifi solution of the problem.

Some doctors have pointed out tha under such conditions they can observe th temperature while the thermometer is still i position with the patient. But this is neithei convenient nor always permissible.

In recent years, bimetallic thermometers and liquid-in-metal thermometers have also been developed incorporating a maximum indicating device with a view to overcoming this difficulty. But they take an extremely long time to register and so are not convenient for the patient. It is possible to design a maximum-minimum type glass thermometer which could be used for such a purpose. But it will be rather costly and has not been introduced in the market.

Another problem is the choice of a suitable maximum indicating device. In our country we are importing thermometer from almost every corner of the world. Several types of maximum indicating devices are being used in these thermometers. The most common of them utilise the Hicks patent, namely, a notched constriction. The introduction of a rod in the bulb of the thermometer projecting up to the start of the capillary is another device being used on a very large scale in Europe for the purpose. Some other methods of achieving this employ bifurcation of the capillary, twisting or spiralling the capillary, making two jet sections in the capillary, and introducing a circular tube in the capillary at right angles to it. The basic requirement of all these devices is that the tube should become smaller than 7 microns or so at the point of constriction. A tube of such a small diameter does not allow mercury to pass through it.

There can be several arguments for advocating each of these devices and they have all been successfully used. So the choice can be left to the convenience of the manufacturer. However, the practical aspect is that if the constriction is too soft, the thermometer is useless for the application for which it is meant. On the other hand, if it is too hard the thermometer often breaks while shaking the mercury down.

Clinical thermometers have got to be used in the human body where they come into contact with the saliva and perspiration. They have to be sterilised before the next application, and have to withstand chemical reaction. Very often they also remain in water because they are washed with it after use. The filling used for marking these thermometers must be able to stand these chemical reactions for a considerable time. We have to evolve a suitable procedure for this purpose.

Clinical thermometers are often marked as fast or stubby, or half-minute, one-minute,

two-minute. It is now recognised that such marking is meaningless. Under different conditions of applications, the time required by the thermometer to acquire the human temperature is not the same. It is well-known that any thermometer would take considerably more time to acquire an ambient temperature in air than in water. The condition of skin and membraneous tissue with which the thermometers come into contact, differ not only from man to man and from one part of the body to another, but this also considerably depends on the condition of health and disease of the person. As such, it has now been widely recognised that the above mentioned markings are deceptive. Most countries are banning such marking in specifications for such thermometers. But some sort of guarantee is obviously necessary to be sure that the time lag of the thermometer is not unnecessarily large. It may be worthwhile studying the available thermometers and specifying a suitable test for this purpose.

The temperature of man is an important indication of his health. It is, therefore, very necessay to check up the thermometers against standards rather frequently. In France, there is a law that no factory can turn out a clinical thermometer unless it has been checked and found all right by their national laboratory. In USA it is criminal to use a clinical thermometer unless it has been checked by some Test House within a specified maximum time. In many other countries, like UK, people are themselves careful that the instrument which they use for checking their health is in good order. The importance of such legislation in our country cannot be over-stressed.

Weighing Mechanisms in Measurement & Control

L. SANDERS
Chief Development Engineer, Load Cells,
Avery Limited,
Birmingham

(We are glad to reproduce this extremely well prepared and informative article in *Metric Measures*. This has been reproduced from *Product Design Engineering*, Jan. 1964. We are grateful to the Editor, *Product Design Engineering* for the permission to publish the article and to Avery Ltd., Birmingham, for supplying the necessary figures.)

—*Editor.*

METHODS OF DETERMINING WEIGHT

By the Comparison of Masses

Equal and unequal armed levers. Weight may be determined by direct comparison of the mass of a body with the masses of known standard 'weights' using an *equal-armed* beam scale or a weighing lever system of known ratio. The balance (1) and the simple Roberval pattern counterscale (2) are examples of the equal beam. Accuracy obtainable with a precision balance is within one part in 10^6 'and with a micro-precision balance one part in 10^7. The steelyard (3) is the simplest form of *unequal-armed* lever.

Compound lever systems are used in platform and hopper scales and in weighbridges. Essentially the gauges between the fulcrum knife-edges 'a' and the load knife-edges 'b' on the main lever 'c' must be equal, so that accuracy of weighing is unaffected by the position of the load on the platform (4). Weight may be measured by the comparison of the mass-moment of the body with the mass-moment of a pendulum of known calibration (5). Since the ratio between the moment of the pendulum and its angular movement follows a sine law it is necessary to introduce a cam for the load suspension arm to obtain equal increments of movement for equal increments of load. A cam of circular profile gives sufficient accuracy for most practical purposes (6). The principle of a weighing pendulum with rolling fulcrum is a form extensively used in industrial dial scales.

Balancing Mass using Elastic Strain

The spring balance is a helical spring extended by the load hanging from it. By careful design a very close approach to linearity is possible (7).

When a rack and pinion are used to magnify the deflexion of the spring mechanically we have the basis of a spring dial scale (8). A ribbon-type weighing spring, held in tension, provides a torsional weighing resistant, suitable for use with sensitive scales

requiring a short range chart, such as a graticule with optical projection (9). A weighing spring used in bending is also suitable for scales requiring only a short range chart for difference weighing. These springs are usually arranged in pairs to provide lateral stability and symmetry (10).

Electric load cells are basically spring-operated scales (11). An elastic column 'C' supports the load to be weighed and is compressed. Electric strain-gauges 'S.G.' are bonded to the column and follow its deflexion, thereby suffering a change in electric resistance, which may be measured by suitable instruments and interpreted in terms of weight. In practice, groups of strain gauges are used, active gauges for load measurement and passive gauges for automatic temperature compensation.

Electro-magnetic force (or mass) balance system determines mass by balancing the weight of a body by forces set up in an electromagnetic field (12). The coil and magnet are similar to those used in a moving-coil loud-speaker.

A scale pan is supported on the coil and the mass to be weighed is balanced by passing a direct current through the coil. Current is measured and the instrument calibrated in terms of weight.

It is difficult to obtain good linearity over a wide range but these systems are used successfully in high-speed check weighers operating at a predetermined weight.

METHODS OF INDICATING WEIGHT

Marked Weights

Read-out of weight in its simplest form is provided by the denominations marked on loose weights used with the beam scale or balance. Correct weight is the sum of all the loose weights used. The method is time consuming and liable to error. Modern precision balances have mechanical means for depositing weights and their values are indicated by figures on the control knobs.

Dial indication

Weight indication by dial and pointer is used both for domestic and industrial scales. By having the pointer and chart in the same plane, giving edge-to-edge reading, parallax and shadow is entirely eliminated (13). For stamping, chart divisions on industrial scales must be at least 1/8 in apart. Dial sizes vary from 18 to 28 in. in diameter of reading line, and for special purposes such as in cattle market auction rings dials of 48 in diameter are used.

Dial capacity may be increased several times, without coarsening the minor division, by incorporating a system of unit weights each equivalent, in effect, to the dial capacity, and which can be deposited manually or automatically, Thus 4 unit weights may increase the weighing range of a weighbridge to 5 times that of the dial capacity with the same subdivision of weight (14).

Flashes in the chart automatically alter the major denomination figures so that weight reading is direct without mental arithmetic. Dial capacity is increased 5 times by sequenced deposition of unit weights either side of the weighing lever fulcrum (*a*). Each weight is equivalent to the dial capacity. In zero load condition two weights hang from saddle (*b*) suspended from left-hand side of the weighing lever fulcrum. When load exceeds dial capacity, hand lever (*c*) is knotched one step in quadrant which rotates forked rocker beam (*d*) through pinion (*e*) and relieves one weight from the saddle, thus balancing off the load. At the same time, linkage (*f*) connected to rocker indexes the dial. When load exceeds twice the dial capacity, knotching the lever another step rotates the beam until it engages and relieves the saddle of the second weight and again indexes the dial. Further rotations of the beam with successive

Balance

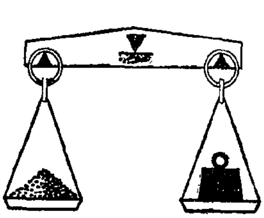

Fig. 1

Roberval counterscale

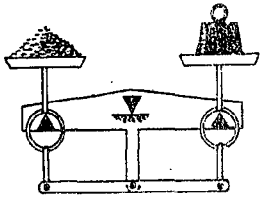

Fig. 2

Steelyard

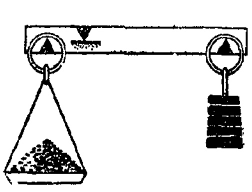

Fig. 3

Compound lever platform scale

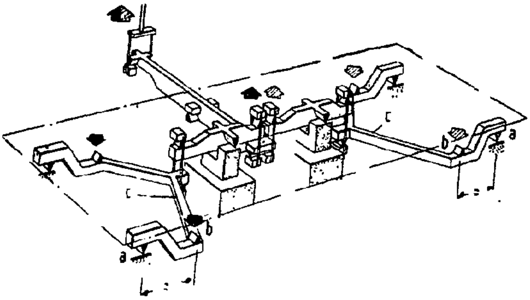

Fig. 4

Pendulum mechanisms

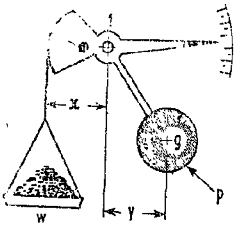

Fig. 5

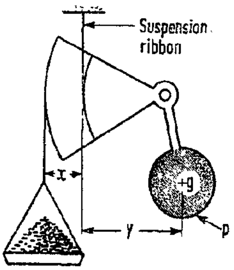

Fig. 6

W is mass being weighed. P is mass of pendulum with centre of gravity at g. Radius of load suspension cam is r. Equation for balance is Wx=yP

MECHANICAL

Spring balance

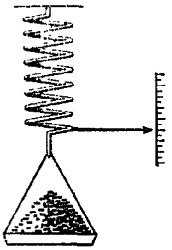

Fig. 7

Spring dial balance

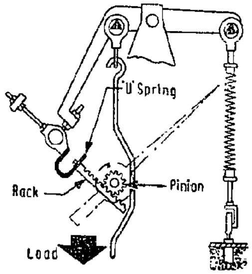

Fig. 8

Weighting ribbon scales—torsion

(a) Tensioned steel band
(b) Tension screw
(c) Lever connected to scale
(d) Connecting link
(e) Graticule

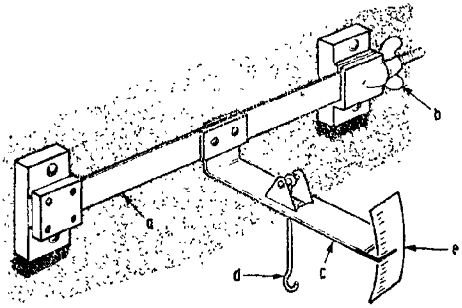

ELECTRICAL

Load cells

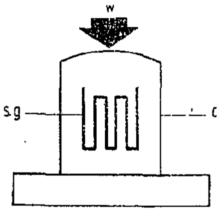

Fig. 11

Weighing ribbon scales —bending

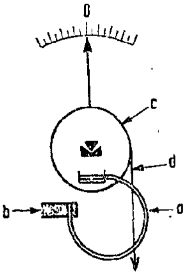

Fig. 10

(a) Steel bands in bending
(b) Band anchor
(c) Drum
(d) Load connexion to scale

Electromagnetic balance

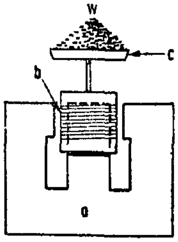

Fig. 12

knotching of the handle causes the other (descending) arm of the rocking beam to deposit unit weights on the right-hand saddle (*g*) which is connected to the opposite side of the weighing lever fulcrum, thus providing 5 times dial capacity.

Multi-revolution dial scales

As an alternative to unit weights, dial mechanisms capable of rotating their pointers several times are available and are used in scales of smaller capacity.

In order to keep lever movements within reason, the indicator pinion has to be small and this calls for an exceptionally high degree of accuracy in gear cutting.

Digital indication of weight

Advanced electronic techniques have made possible rapid direct digital indication of weight using the many forms of digital display devices now commercially available. Signals to operate the display are provided by photo-electric digital encoder units mounted on the scale mechanism or from analogue devices passing the signal through a digitizer system.

Optical magnification of weight indication

Magnification of the small angular movements of levers in a weighing system may be achieved by optical projection methods to give a brilliant image of chart graduations of large size (15).

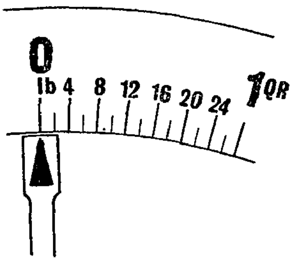

Fig. 13

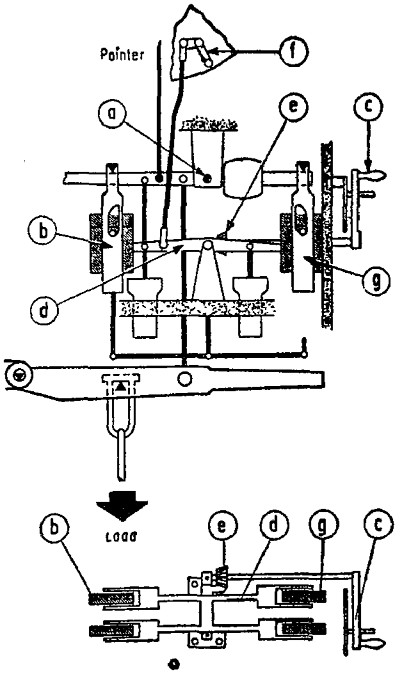

Fig. 14

A *transparent* chart, photographically produced, carries 1000 or more weight graduations in miniature and can be mounted directly on the weighing pendulum in the form of a quadrant or on an indicator spindle in the form of a circular disc. Magnifications of 30 or 40 diameters are common. Optical indication is also used on precision instruments and on the revolutionary 'Aristocrat' retail scale by Avery which displays weight, unit price and total value or to both vendor and purchaser. On the 8 in. diameter optical chart there are nearly half a million figures.

In optical projection of weight the figures and graduations are in movement until the scale comes to rest. This system is therefore not so convenient as the dial for weighing to a predetermined weight, but it is gaining in popularity for normal weighing. Compound lever system is connected to weighing arm (a)

via rod (*b*). Other end of arm is connected to weigh pendulum (*c*) through rod (*d*) and steel ribbon (*e*). The ribbon wraps round cam (*f*) integral with pendulum which has ball-bearing fulcrum slightly off centre from geometric centre of the cam profile. Mass moment of pendulum balances load on the arm and the geometry ensures that relationship betweenl oad and angular displacement is linear.

Peripheral displacement of graduated quadrant chart (*g*) fixed to pendulum is projected through magnifying optical and mirror system to ground glass read-out window (*h*) Forked lever (*i*) is motored to transfer weight (*m*) on to saddle on weighing arm which balances off the load when dial capacity is exhausted, zeroing the dial. Poise (*j*) positioned on weighing arm by hand wheel (*k*) flashes tare weight in subsidiary window (*l*).

Weight Integrators and Totalisers

In the continuous weighing of material in transit on conveyor belts or weighing successive like loads, such as the trucks in a mineral train, integrating or totalizing of weights is required.

Weight totalizers have various forms of automatic clutch which engage with the driving mechanism of a poise or with the motion of a weighing pendulum or spring and transfer these movements into a mechanical counter of conventional form geared so as to record a total of weight.

In the simple single-weigh rollertype belt-weigher, continuous integration is necessary to totalize the weight of material carried by the belt. Movement of the weighing mechanism is used to traverse a ball in a cone and cylinder or cone and disc type of infinitely variable gear driven from the belt pulley. By this means, weight and belt movement are integrated to give the total weight delivered.

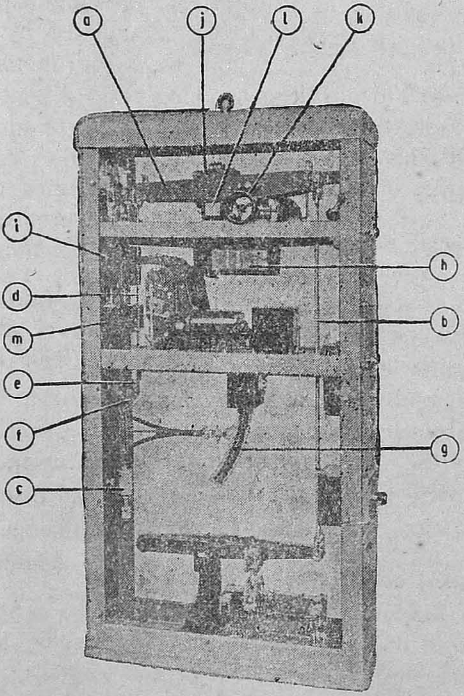

Fig. 15

Remote weighing indicator

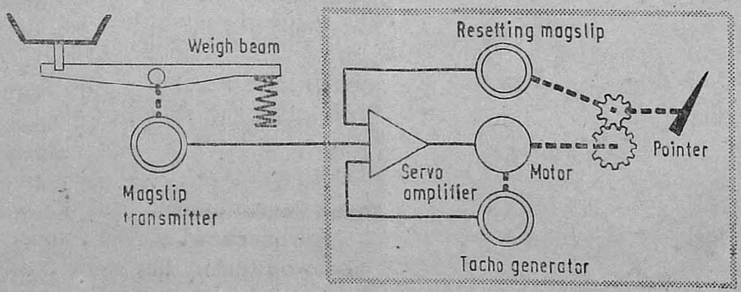

Fig.19

Outputs of the magslip transmitter at the weighing device and of the resetting magslip are connected *via* potentiometer networks and summing resistors to the input of the servo amplifier (16). The amplifier controls a servomotor and gearbox which are connected to the pointer and also drive the resetting magslip. Thus the signal from the weighing device controls the pointer through the servo system to balance against the resetting magslip. Stabilizing feedback is supplied by a tacho-generator integral with the motor. (Evershed and Vignoles Ltd.)

WEIGHT CONTROL SYSTEM

Weight as a parameter may be used to operate systems for automatic predetermined weighing, processing and mechanical handling.

The control devices, such as sensitive switches, ideally should absorb none of the very small amount of energy available in the weighing mechanism.

Analogue output generators

A continuous electrical output, bearing an extremely accurate linear proportionality to weight, is provided by the Avery analogue generator, operating on a voltage divider principle (17).

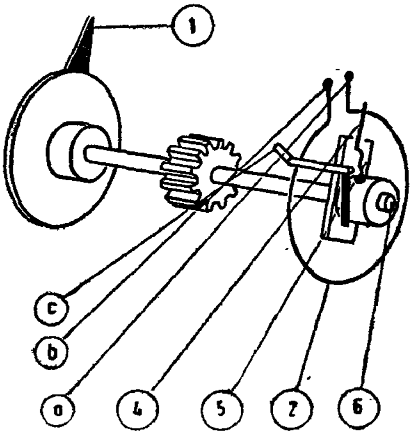

Fig. 17

This provides an infinite number of cut-off points around the dial, readily set from a remote control panel. By the use of a digitizer the analogue output can operate printers and card or tape punching machines.

Remote slave dials can also be operated from the master analogue by means of a servo-motor system.

Single turn of silver palladium alloy wire (2) is wound upon a fixed, rigid and accurately ground former of stable insulating material, Terminals (*a*) and (*b*) are connected to a low voltage alternating current supply and there is, according to the phase of the supply, a voltage gradient between (*a*) and (*b*) along the wire. Arm (5) rotates with the scale indicator (1) and spindle (6) and carries a fine gold alloy wire (4) which is in permanent light flexible contact with the wire loop (2) and picks off a voltage which bears an exact linear relationship to the angle through which the arm (5), indicator (1) and spindle (6) have rotated.

Pillar connected to terminal (*c*) carries a second fine gold alloy wire contacting an insulated bush on the arm (5) and completes the circuit.

Comparison of two voltage analogues of weight

One voltage analogue is generated by a transducer fitted to the operating spindle of a conventional weigh scale (19). The other analogue is produced by a digital/analogue store unit, which produces an analogue voltage in proportion to the demand weight required by the recipe as set into the system in digital form. The amplifier gives a d.c. output signal between its two output lines when the two analogues have the same value but not if the weigher is less than the demand analogue. (E.M.I. Ltd.)

Digital Encoder system

Introduction of the modern miniature photo-transistor has made possible the use

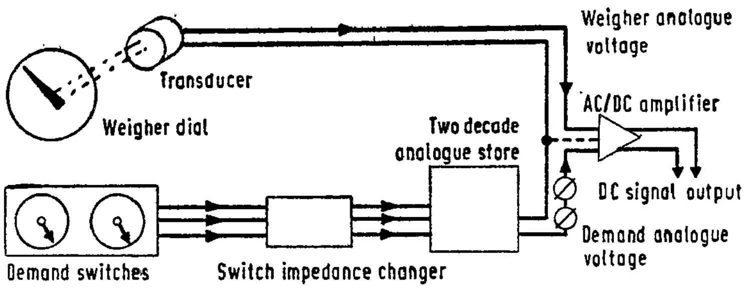

of optical digital encoder systems in conjunction with weighing mechanisms. The Avery digital encoder, using a Gray binary code, is an integral part of the scale mechanism requiring no extra spindles or bearings.

The electrical output, in binary digital form, is readily convertible by static state devices into any weight denomination and can operate scale controls, computers, printers and any data processing machinery.

Trip switches

For simple cut-off a microswitch or a mercury switch may be set to trip like a mouse-trap using the energy available on the removal of the load from the scale for resetting (18).

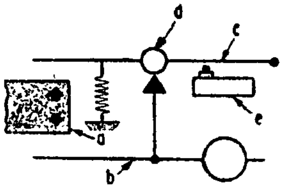

Fig. 18

Pneumatic cut-off

Pneumatic controls may be fitted to scale mechanisms with no measurable influence and with the advantage that no special precautions are required for their use in hazardous atmospheres.

In principle a fine air jet (*a*) issuing from a nozzle 0·015 in in diameter, is intercepted by a vane (*b*) mounted on the scale spindle and moving in a plane normal to the jet. The air jet is directed into a diaphragm relay valve (*d*) in which induced pressure normally holds the valve in the operative position. On interception of the jet by the scale controlled vane, the pressure in the relay collapses and the relay valve operates power line controllers (20).

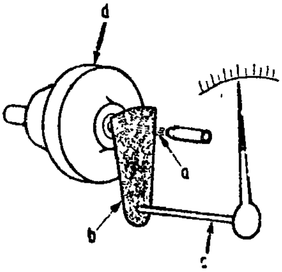

Fig. 20

Fine wire contacts

Wiping contacts consisting of a precious-metal wire wiper and contact plate can be fitted to most industrial scales, and absorb little energy. Current handled is of the order of a few milliamps; therefore, an electronic amplifier and relay are needed for the operation of power circuits. They are used to control feed cut-offs, alarms, etc. (21).

The number of such adjustable contacts that can be fitted to a dial is limited by design considerations. The Avery fine wire contact is certified as intrinsically safe for certain hazardous atmospheres.

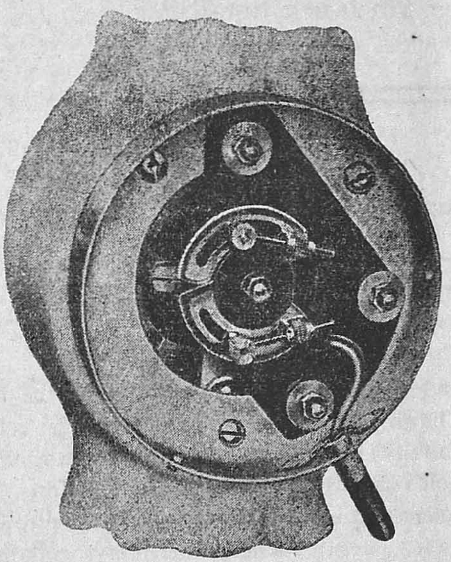

Fig. 21

COUNTING BY WEIGHT

Photo-electric cut-off

One of the most sensitive weight controls is the photo-electric cut-off. A beam of light is intercepted by a moving member of the weighing mechanism, and through an electronic amplifier the change in output of the photo-cell is used to operate controls. Miniature photo-transistors are now extensively used in fine weighing and in high-speed check weighters.

Similar articles in a production run may be counted quickly and accurately by comparing the mass of a single article with that of a batch using a weighing lever system of suitable ratio (22).

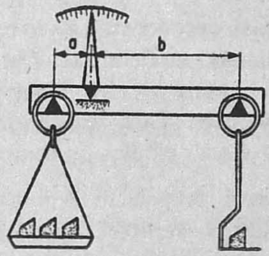

Fig. 22

In more advanced systems ratio levers are incorporated in standard dial scales, and in the case of the Avery Unit Counting Machine a counter balanced sliding ratio pan enables a count to the nearest article to be made.

Ninth Conference of Controllers of Weights and Measures

The Ninth Conference of Controllers of Weights and Measures is scheduled to be held in Shillong on 30 and 31 October 1964. Among the subjects to be discussed at the Conferenec would be :

(1) A review of the progress of metric reform.

(2) The setting up of the central machinery for approval of prototypes.

(3) A plan to evolve standard designs for precision laboratories in the States.

Technical subjects like the marking of class on beam scales and the feasibility of reducing the varieties of commercial brass weights in use would also be discussed.

A report on the Conference will be given in the January 1965 issue of *Metric Measures.*

American Society for Testing Materials (ASTM) Metric Practice Guide

Last year the American Society for Testing Materials (ASTM) announced its decision to include in the publications the metric equivalents for other units of measurement, and drew attention to the need for American industry to be prepared for a wider use of the metric system. ASTM did not advocate a change in established dimensions or tolerances but—in addition to the inclusion of metric equivalents as standards were revised or reissued—it recommended that quantities and/or tolerances be selected, when publishing new standards, which will convert to convenient reasonable metric values.

To implement the use of the metric system by ASTM, a special committee has prepared a publication, *ASTM Metric Practice Guide*, presenting existing units and their equivalents in the recognized international units of the System International (SI). (*BSI News*, July 1964, p. 6).

Australian Decimal Currency

It has been reported that the new decimal currency notes to be issued during 1966 in Australia, will bear the denominations of $ 1, $ 2, $ 10 and $ 20. We have already reported that Australia would go over to decimal coins from February 1966 (*Metric Measures*, Vol. 6, July 1963, p. 22).

French Count System

Textile mills, especially the composite ones have been experiencing some difficulties in regard to the implementation of the French Count System. The reviewing Committee set up by the Textile Commissioner to watch the progress of implementation has made certain recommendations with a view to meeting these difficulties and other issues. The recommendations are :

(1) Composite cotton textile mills may spin and weave half French Count also in so far as the manufacture of coarse fabrics for domestic consumption alone is concerned.

(2) In regard to weaving of fabrics of other categories of cloth falling under medium 'B', medium 'A', fine and super-fine, mills should spin only integral French Count and utilise the same in the manufacture of cloth falling under the above

mentioned categories of cloth for domestic consumption.

(3) As for manufacture of yarn and fabrics meant exclusively for export, mills have already been advised that they are free to spin yearn in any system (including fractional counts) and weave cloth also in any system, in accordance with the specifications of the foreign importers. If a portion of such production of yarn and fabrics manufactured for export is found later to be surplus to the export requirements by a mill and if it is required to divert that quantity to the internal market, after securing the specific permission of the Textile Commissioner in each case.

Weights and Measures Service in Israel

The annual report of the Weights and Measures Service, Ministry of Commerce and Industry, Israel, for the period 1-4-1963-31-3-1964 makes interesting reading. The work of the Weights and Measures Service is based on the Weights and Measures Ordinance, 1947, and the Rules, Orders and Official Notifications issued thereunder.

During the year 1963-64, 82,019 weights, 1,384 measures of length, 3,568 measures of capacity, 758 measuring pumps and 19,754 weighing machines *i.e.*, a total of 107,483 instruments were verified and reverified. Of these, 29,448 weights, 628 measures of length, 2,091 measures of capacity, 4,352 weighing machines were verified for the first time. Almost all the new appliances were produced locally, except liquid fuel measuring pumps.

The verification stamp was obliterated from 7,965 weights, 14 measures of length, 28 measures of capacity and 1,824 weighing machines. A total revenue of 47,925 Israel pounds was collected during the year. This gives the average revenue of 44·6 Agorot per instrument. A total of 19,593 inspections were carried out. Some 1949 traders were served notices regarding shortcomings in their instruments or non-reverification. In 296 cases further action was taken.

During the year 265 prosecutions were launched, resulting in 262 convictions and 3 acquittals. The total fines amounted to 14,338 Israel pounds. Among the offences, 194 related to possession, for use in trade, of false instruments ; 51 to possession, for use in trade of non-verified and unstamped instruments ; 26 for negligence in showing instruments for re-verification, 6 related to obstruction of Inspectors, 1 to fraud in use of instruments and one to overcharging. The main offence was, as in the previous years, possession for use in trade of self-indicating machines which were not properly balanced and indicated weight to the prejudice of the buyer.

Use of Illegal Measures—A Case

The judgement pronounced in the court of First Class Magistrate, Gulbarga, Mysore State, in the case of the State represented by the Inspector of Weights and Measures, Gulbarga and a Kirana and Grain Merchant, Bramhapur, Gulbarga, is summarised below, as it will be of interest to the general public. The case was taken in appeal before the Hon'ble Sessions Judge, Gulbarga, who upheld the judgement of the lower court and dismissed the appeal of the accused.

The accused had a kirana and grocery shop in Bramhapur. It was stated that the accused was using illegal measures in his shop and had contravened the Mysore Weights and Measures Act and had committed offences under Section 23 of the said Act. The accused was seen by the Inspector of Weights and Measures, measuring maize (jola) with seer dry measure. Other dry measures of the ounce series were also found on the premises. On behalf of the accused, it was argued that he was in possession of standard weights and measures in the metric system

and that the old measures had remained in the shop, but were not being used, and therefore, the possession of the old measures in a corner of the shop did not amount to any offence.

This plea was, however, not accepted and it was pointed out that this arguement would have been valid if the old illegal measures had been found in some area like a residential house and condemned as a useless article. On the basis of the evidence of witnesses, it was held that the accused was using illegal measures for sale of maize and, therefore, contravened the provisions of Section 7. According to the provisions of this said Act and Rules, maize is to be sold by weight and not by dry measure. As the accused used dry measures, he contravened Section 23. Further, the accused possessed illegal dry measures in the shop and used them. It was presumed that the accused knew that these were false measures under the Act. He was, therefore, also found guilty under Section 30 of the said Act.

The accused was thus held guilty of offences under Sections 7, 23 and 30 and sentenced to a fine of Rs. 51, for each of the offences. In default of payment of fine, he was to undergo simple imprisonment for a fortnight for each of the two counts.

3 Paise Coins from October 1964

A new coin in the denomination of 3 paise was issued from all offices of the Reserve Bank of India on 1 October 1964. As stocks of the new coin become available, it will be issued progressively from all agency banks of the Reserve Bank of India and all Government treasuries and sub-treasuries.

The metal composition of the new coin is aluminium with 3.5 to 4 percent magnesium. This alloy is being introduced in the country as a coinage medium for the first time. The coin is hexagonal in shape with rounded corners and its weight is 1.25 grams.

The obverse of the coin bears the Lion Capital of the Asoka Pillar with the words 'Bharat' in Hindi and 'India' in English inscribed on either side.

The reverse of the coin bears the value of the coin in the international numeral in the centre with its Hindi rendering and the year of coinage inscribed above and below the numeral, respectively. The Ears of Corn appear on either side of the International Numeral.

Indian Current Science Abstracts

The need has been felt for a long time for a bibliographical periodical covering the entire scientific output of the country quickly and comprehensively. The Conference of Information Scientists convened by the Council of Scientific and Industrial Research in Mysore during 1963 realised this need acutely and directed the Indian National Scientific Documentation Centre (INSDOC) to take immediate action for ensuring bibliographical control of scientific publication in India.

INSDOC has decided to start a monthly abstracting service from January 1965, reporting under the title 'Indian Current Science Abstracts' the work published by scientists in India. As far as possible efforts will be made to include scientific communications published abroad by Indian nationals. Original articles, short communications, critical reviews and informative articles published in scientific and technical periodicals or in proceedings of scientific conferences, symposia, etc., monographs and other *ad hoc* publications, as well as patents and standards, will be noticed in this publication. The annual subscription for the publication will be Rs. 50 only (Foreign £ 10 or $ 30).

This comprehensive coverage is possible only through the cooperation of various institutions, departments, societies and individuals who are bringing out scientific periodicals, reports, monographic publications etc. We appeal to all concerned to send us regularly such publications, including reprints of papers published in foreign periodicals, at he following address:

ndian Current Science Abstracts
ndian National Scientific
Documentation Centre
Hillside Road,
New Delhi-12.

Standards News

(Indian Standards which have a particular bearing on the change-over to the metiic system are indicated here. Copies would be available from the Indian Standards Institution Manak Bhavan, 9, Bahadur Shah Zafar Marg, New Delhi or their Branch Offices at Bombay, Calcutta, Kanpur and Madras.)

The National Flag of India (Cotton Khadi)

Indian Standards Institution has published the first revision of Indian Standard Specification for The National Flag of India (Cotton Khadi) (IS: 1—1964), which prescribes the design, constructional details and other particulars of the national flag of India (cotton khadi) made of hand-spun and hand-woven cotton khadi bunting.

This standard was first published in 1951 in which all dimension and quantities were expressed in fps system units; the corresponding metric equivalents were also included in some cases. With the adoption of metric system in India, the Sectional Committee decided to revise the standard with a view to changing over completely to metric system.

Further, in view of the experience gained since the standard was first published, the Sectional Committee decided to take this opportunity to incorporate a few modifications of basic character. Therefore, in this revised standard, details of cotton yarn for the warp and weft of cotton khadi bunting and of cotton duck have been deleted. The dimensions of hemp cordage and those of wooden toggles used for different sizes of flags have been amended. The pH value of the aqueous extract of cotton khadi bunting and tolerances on the dimensions of the Flag and Asoka Chakra have been prescribed.

Price Rs. 3·50

Plywood Tea-Chests

Indian Standards Institution has published the Second Revision of Indian Standard Specification for Plywood Tea-Chests (IS: 10—1964), which covers requirements for plywood for tea-chests, standard sizes and requirements for tea-chests and their components, the tare and tests for plywood and tea-chests.

A tentative Indian Standard for Plywood Tea-chests was first published in 1949 and this was subsequently revised in 1953. The present one is the second revision of this standard in which values have been specified in the metric units in place of fps units given in the

original specification. Another important change is that the face and back veneers of plywood panels are permitted to be of different species of timber provided the construction is balanced and the two species have similar physical characteristics.

Price Rs 4·50

The National Flag of India (Silk Khadi)

Indian Standards Institution has published the first revision of Indian Standard Specification for The National Flag of India (Silk Khadi) (IS: 300—1964), which prescribes the design, constructional details and other particulars of the National Flag of India (Silk Khadi) made of hand-spun and hand-woven silk khadi bunting.

This standard was first published in 1955 in which all dimensions and quantities were expressed in fps system units; the corresponding metric equivalents were also included in some cases. With the adoption of metric system in India, the Sectional Committee decided to revise the standard with a view to changing over completely to metric system.

Further, in view of the experience gained since the standard was first published, the Sectional Committee decided to take this opportunity to incorporate a few modifications of basic character. Therefore, in this revised standard, details of silk yarn for the warp and weft of silk khadi bunting and of cotton duck have been deleted. The dimensions of hemp cordage and those of wooden toggles used for different sizes of flag have been amended. The pH value of the aqueous extract of silk khadi bunting and tolerances on the dimensions of the Flag and Asoka Chakra have been prescribed.

Pric s 3·50

Mild Steel and Brass Cup, Ruler and Square Hooks and Screw Eyes

Indian Standards Institution has published the first revision of Indian Standard Specification for mild Steel and Brass Cup, Ruler and Square Hooks and Screw Eyes (IS: 724—1964), which lays down requirements for mild steel and brass cup, rulers and square hooks and screw eyes.

This standard was first issued in 1956 specifying the various dimensions and other requirements of cup, ruler and square hooks and screw eyes in the fps system. In view of the adoption of the metric system of weights and measures by the Government of India, the need for revision of this standard with a view to metricizing it and bringing it in line with IS: 451—1961 Specification for Wood Screws (*Revised*) in regard to form of screw thread and other relevant requirements, has long been felt by both the trade and consumers. This revision, therefore, specifies the various dimensions and other requirements of hooks and eyes made of mild steel and brass in the metric units, and the details of screw threads and other relevant requirements in accordance with IS : 451—1961.

The Sectional Committee responsible for the preparation of this standard has taken into consideration the views of producers, consumers and technologists and has related the standard to the manufacturing and trade practices followed in the country in this field. Due weightage has also been given to the need for international co-ordination among standards prevailing in different countries of the world.

Price Rs 3·00

Person Weighing Machines

Indian Standard Institution has published the first revision of Indian Standard Specification for Person Weighing Machines (IS : 1854—1964), which covers the requirements for person weighing machines.

This standard was originally published in 1961. From the experience gained and comments received from manufacturers and users, it has been considered necessary to

revise this standard. Main modifications carried out in this revision are as follows:

(*a*) The capacity of the person weighing machine has been specified as '120 kg' in place of '150 kg';

(*b*) The value of the smallest division on the steelyard has been given as 'shall be not more than 50 g' instead of 'shall be 50 g';

(*c*) The minimum graduations have been specified as 'shall be not more than 500 g' instead of 'shall be 500 g'.

This standard is one of a series of Indian Standards on commercial weighing machines, being prepared at the instance of the Standing Metric Committee (now the Directorate of Weights and Measures), Government of India in connection with the introduction of metric system of weights and measures in the country.

Price Rs 2·00

Dimensions for Pipe Threads for Fastening Purposes

Indian Standards Institution has published Indian Standard Dimensions for Pipe Threads for Fastening Purposes (IS: 2643—1964), which deals with the basic profile, design, dimensions and tolerances of pipe threads for fastening purposes intended for mechanical assembly of components and where pressure-tight joints are not required on the threads.

This standard deals with internal and external pipe threads for fastening purposes, intended for the mechanical assembly of component parts of pipes, fittings, cocks, valves, etc. where pressure tight joints are not required on the threads. Parallel internal threads specified in IS:554—1955 Specification for Pipe Threads for Gas List Tubes and Screwed Fittings, for obtaining a pressure-tight joint on the threads, provided such threads are not truncated. The profile of the thread specified in this standard is identical with that of the parallel thread specified in *IS: 554—1955. The internal and external threads covered in this standard are both parallel.

Price Rs 2·00

Dimensions for Wrought Aluminium and Aluminium Alloys, Sheet and Strip

The Indian Standards Institution has published Indian Standard Dimensions for Wrought Aluminium and Aluminium Alloys, Sheet and Strip (IS: 2676—1964), which lays down the dimensions and tolerances for wrought aluminium and Aluminium Alloys in the form of sheet and strip.

This standard is one of a series of Indian Standard on Wrought Aluminium and Aluminium Alloys. Other Standards in this series are :

IS: 2525—1963 Diameters of Wrought Aluminium and Aluminium Alloys, Wire.

IS: 2677—1964 Dimensions for Wrought Aluminium and Aluminium Alloys Plate.

IS: 2678—1964 Dimensions for Wrought Aluminium and Aluminium Alloys, Drawn Tube.

IS: 2673—1964 Dimensions for Wrought Aluminium and Aluminium Alloys, Extruded Tube.

Price Rs 2·50

Brass wire for cold-Headed and Machined Parts

The Indian Standards Institution has published Indian Standards Specification for Brass Wire for cold-Headed and Machined Parts (IS: 2704—1964), which covers the requirements of brass wire for hardware, such as nipples for cycle spokes, where cold-heading as well as machining properties are required, either in cut lengths or in coils.

Price Rs 1·50

Metric, Woven Metallic and Glass Fibre Tape Measures

Indian Standards Institution has published the first revision of Indian Standard Specification for Metric, Woven Metallic and Glass Fibre Tape, Measure (IS : 1269—1964), which prescribes the requirements for metric, woven metallic and glass fibre tape measures intended for use where it is not possible to employ rigid measures of length.

This standard was first published in 1958. The present revision is based on the suggestions received from the Controllers of Weights and Measures as a result of practical application of the standard. Tapes of 15 m denomination have also been included. Besides, glass fibre has been specified as an alternate material for the manufacture of tapes.

Price Rs 2·00

Burnt Clay Facing Bricks

Indian Standards Institution has published Indian Standard Specification for Burnt Clay Facing Bricks (IS: 2691—1964), which specifies the dimensions, quality and strength, and methods of sampling and testing for burnt clay facing bricks for use in buildings.

Facing bricks are intended for use in the exposed face of masonry without any further surface protection by plastering or rendering. Its use may be necessary for architectural reasons; sometimes, where external plastering or renderings have to be frequently renewed due to corrosive atmosphere, use of facing bricks will prove to be economical. The general practice in this country is to use common bricks selected for proper shape and degree of burning and use them as facing bricks. This may not be always satisfactory, as facing bricks require not only trueness in shape and good appearance but also resistance to the effects of atmospheric agents, and for the latter aspect specific requirements will be necessary, generally superior to those of common bricks.

Price Rs 2·00

Drawing Filing Equipment

Indian Standards Institution has published Indian Standard Specification for Drawing Filing Equipment (IS: 2695—1964), which lays down the dimensional and other requirements of filing equipment, such as plan chests, vertical filing equipment, lateral filing equipment for small drawings and roll files for large drawings.

It has been the experience of many architects, engineers and draughtsmen that old drawings, when required for reference purposes after a few years, are either found in a dilapidated condition or not found at all. This usually results in wastage of time as well as loss of valuable drawings. This standard is intended to provide guidance with regard to the drawing filing equipment and will help in the elimination of most of the defective systems presently in use.

While preparing this standard only the sizes of drawing sheets covered in IS:1064—1961 Specification for Paper Sizes (*Revised*) have been considered.

Price Rs 3·50

Flats and Flats' Screws

Indian Standards Institution has published Indian Standard Specification for Flats and Flats' Screws (IS: 2699—1964), which prescribes the essential requirements of flats and flats' screws for use in revolving flat carding engine of 1016 mm width.

This standard covers flats and flats' screws for use with flat driving chains conforming to IS: 1927—1961 Specification for Flat Driving Chains for Carding Engines.

This standard does not cover the fillets to be mounted on flats.

A flat is basically a long cast iron bar of T-shaped cross-section. In a revolving flat carding engines, the flats with mounted fillets move over the cylinder and work in conjunction with cylinder fillets effecting a combing

action, thereby cleaning and to some extent making parallel the fibres which are under process. Flats are moved by means of two endless chains known as flat driving chains.

The revolving flat carding engines produced at present in this country are mostly of 1016 mm (or 40 in) width and, therefore, only flats intended for such carding engines have been covered in this standard.

Requirements for the material given in this standard are only the minium and, therefore, the use of other materials having characteristics equivalent or superior to those specified in this standard is not precluded.

All quantities and dimensions in this standard have been given in the metric system.

Price Rs 1·50

Memorandum on Screw Threads for Bicycle Components

Indian Standards Institution has published Indian Standard Memorandum on Screw Threads for Bicycle Components (IS: 2728—1964). This memorandum recommends suitable ISO metric threads for application in bicycle components and a suitable schedule for the smooth changeover from existing threads to the ISO metric threads.

In 1956, the Government of India took a decision to adopt the Metric System of Weights and Measures, and the Indian Standards Institution has prepared a plan to formulate Indian Standards in metric system, and also metricize all the existing standards within a period of ten years. The Screw Threads Sectional Committee of the Engineering Division Council examined the practices that are being followed in the country, and also the work that is being done by the Technical Committee No. 1 Screw Threads of the International Organization for Standardization (ISO), and after very detailed deliberations decided to adopt ISO Recommendations for metric screw threads as represented in ISO/R 63-1958, ISO Basic Profile for Triangular Screw Threads. Basic Sizes for Screw Threads in the Major Diameter Range 0·25 to 5 mm A number of Indian Standards on metric screw threads and fasteners has been published.

The Screw Threads Sectional Committee of ISI decided to investigate the possibility of adopting ISO metric screw threads and formulate standards to cover the screw threads for the interchangeable bicycle components. This memorandum has been prepared as a result of these investigations and contains recommendations for application of screw for bicycle components.

Price Rs 1·50

Recommendation for Preferred Dimensions for Storey-Heights

Indian Standards Institution has published Indian Standard Recommendation for Preferred Dimensions for Storey-Heights (IS: 2718—1964), which lays down recommendation for preferred dimensions for storey-heights.

Storey-height is one of the important controlling dimensions in the planning of a building and its selection has to take into consideration the climatic conditions, the living habits, the cost of construction, the local byelaws, etc. and a fair amount of flexibility for its selection is necessary. However, a selection at random will result in counter-acting the benefits of dimensional co-ordination which one aims to achieve through the use of modular components. Therefore, there is a need for limiting the selection of storey-heights to a set of preferred dimensions. With the increasing emphasis now on the use of pre-fabricated components for buildings, need for preferred sizes of storey-heights has become all the more important. This standard is intended to give guidance with regard to sueh preferred dimensions for storey-heights.

This standard is one of a series of Indian Standards covering modular co-ordination in the building industry. Other standards published so far by the Institution in the series are:

IS: 1233—1958	Recommendations for Modular Co-ordination of Dimensions in the Building Industry.
IS: 2375—1963	Recommendation for Modular Co-ordination Applied to RCC Framed Structures.

Price Rs 1·00

Mild Steel Tubes and Tubulars

Indian Standards Institution has published the first revision of Indian Standard Specification for Mild Steel Tubes and Tubulars (IS: 1239—1964), which covers the requirements of butt welded, seamless, screwed and socketed mild steel tubes and tubulars and plain-end steel tubes, suitable for screwing to pipe threads conforming to IS: 554—1955 Specification for Pipe Threads for Gas List Tubes and Screwed Fittings, of nominal bores ranging from 6 to 150 mm. Three grades of thicknesses, designated as 'Light', 'Medium', and 'Heavy', have been included in this standard.

'Light', 'Medium' and 'Heavy' tubes are suitable for conveying gas and water. Only 'Medium' and 'Heavy' tubes are recommended for conveying steam. The maximum permissible pressures and temperatures for different sizes of tubes for conveying steam are given in an appendix to the standard.

This standard, published in 1958, specified the requirements for three classes of mild steel screwed tubes and tubulars and plain-end steel tubes, designated as 'Light', 'Medium' and 'Heavy.' This standard did not specify all the details regarding the service for which the three classes of tubes were appropriate although broad indications were given. However, this revision clarifies that tubes conforming to this revised standard are suitable for conveying gas, water and steam. The maximum permissible pressures and temperatures for tubes conveying steam are also given for information in an appendix to the standard. Moreover all the clauses relating to general requirements for the supply of material conforming to this standard have been deleted and a reference has been made to IS: 1387—1959 General Requirements for the supply of of Metals and Metal Products.

Price Rs 5·50

Shri P. N. Nayer, Director of Weights and Measures, Ministry of Commerce, left India on Wednesday, 7 October 1964, to take over as Chairman of East AfricanMetric Commission set up by the East African Common Services Organisation to examine the feasibility of adopting the metric system in these countries.

As Secretary of the former Standing Metric Committee and as Director of Weights and Measures, he has been closely associated with the adoption of the metric reform in India.

Last year the services of another Indian officer, Shri Kanwar Jit Singh, Controller of Weights and Measures, Punjab had been lent to Saudi Arabia as adviser on metric system.

Licensed Manufacturers and Repairers

Metric Measures had been publishing in the past a series of lists of licensed manufacturers, dealers and repairers of weights and measures, weighing and measuring instruments licensed by the Governments in the various States and Union Territories under their Weights and Measures (Enforcement) Acts. To economise on paper, it is possible only to publish lists of licensed manufacturers and repairers.

A feature on statistics of verification and licences issued is also being published in *Metric Measures.*

STATISTICS OF VERIFICATION OF WEIGHTS ETC. AND LICENCEES.

States/Union Territories	Period	Weights	Capacity Measures	Length Measures	Weighing Instruments	Measuring Instruments	Others	Total number of — Mfrs.	Dealers	Repairers
								As on first day of Nov. 1964		
1	2	3	4	5	6	7	8	9	10	11
(1) Andhra Pradesh ..	1 Feb. 64 to 31 May64	2,00,101	64,362	6,408	21,747	527	26	14	59	24
(2) Assam ..	1 June 64 to 31 July 64	83,104	—	19,638	490	1,075	45	19	254	238
(3) Bihar ..	1 April 62 to 31 Jan. 63	1,28,211	—	—	19,309	56	—	30	203	43
(4) Gujarat ..	1 Feb. to 31 Mar. 64	—	1,95,320	15,671	3,368	29,759	169	114	585	155
(5) Kerala ..	1 Apr. 62 to 31 July 62	—	—	—	—	—	—	—	—	—
(6) Jammu & Kashmir	1 Apr. 63 to 31 Mar. 64	2,12,854	2,582	7,511	683	3	4	36	36	2
(7) Madhya Pradesh	1 Dec. 63 to 30 Mar. 64	3,80,668	51,514	4,145	69,937	129	63	63	825	291
(8) Madras	1 July to 31 Aug. 64	1,59,120	92,733	1,237	23,303	864	—	—	—	—
(9) Maharashtra	1 Apr. 63 to 30 Nov. 63	12,73,216	2,94,420	5,608	—	—	—	—	—	—
(10) Mysore	1 Apr. 62 to 31 Nov. 62	4,81,345	1,05,253	1,089	1,96	2	—	8	103	6

States/Union Territories	Period	Weights	Capacity Measures	Length Measures	Weighing Instruments	Measuring Instruments	Others	Total number of Mfrs.	Dealers	Repairers
								As on first day of Nov. 1964		
(11) Punjab	1 June to 31 July 64	83,047	30,664	2,490	15,598	112	—	1	7	5
(12) Orissa ..	Jan. 63 to May 64	1,97,851	30,025	1,055	4,891	77	—	8	103	6
(13) Rajasthan ..	N.A.									
(14) Uttar Pradesh	1 Apr. 63 to 31 May 63	46,845	24,513	8,602	5,932	162	—	200	979	187
(15) West Bengal	11 July 64 to 29 Aug. 64	1,14,578	7,483	600	16,392	—	—	—	—	—
(16) Andaman & Nicobar Islands	N.A.									
(17) Delhi ..	1 June 64 to 31 Aug. 64	59,032	5,444 +37 Petrol lorries	1,186	8,827	126	—	66	26	71
(18) Goa ..	1 Apr. 64 to 31 May 64	13,523	1,012	23	26	—	—	—	353	—
(19) Himachal Pradesh	1 Apr. 62 to 31 July 63	68,020	7,411	2,532	10,628	1	—	1	25	12
(20) L.M.A. ..	N.A.									
(21) Manipur ..	1 Apr. 62 to 31 July 64	21,705	4,173	239	981	17	—	—	5	—
(22) Pondicherry	1 Feb. 64 to 31 Mar. 64	4,038	1,341	36	21	4	37	4	10	3
(23) Tripura ..	1 Apr. 62 to 30 July 62	62,050	8,464	720	9	8	—	4	85	3

N.A.—Statistics not available as yet.

M113DPD/64—GIPF

ISI

CONVERSION SLIDE

A UNIQUE INSTRUMENT FOR INTER-CONVERSION OF VALUES

A **MUST** for all engineers, designers and constructors in India and abroad, wherever inter-conversion of values from metric to non-metric units or vice-versa is a matter of routine.

Quantities Covered include:

Length—mile, foot, inch (decimal and fractional), kilometre, metre and millimetre.

Area—Square inch, square foot, square centimetre and square metre.

Volume—Cubic foot and cubic metre.

Capacity — Gallon (UK) and litre.

Weight—Pound, seer, maund kilogram and quintal.

Pressure & Stress—Pound per square inch, ton per square inch, kilogram per square centimetre and kilogram per square millimetre.

Gauges—Birmingham (BG), British Standard Wire (SWG), American Brown & Sharpe (AWG), and Indian Standard Thicknesses and Diameters of wire.

Temperature—Fahrenheit and Centigrade.

PRICE—Only Rs 15.00 plus postage.

For enquiry and order, please write to

INDIAN STANDARDS INSTITUTION

MANAK BHAVAN, 9 BAHADUR SHAH ZAFAR MARG, NEW DELHI-1

Branch Offices : BOMBAY • CALCUTTA • KANPUR • MADRAS

march together
work together

"Let people in different parts of the country, however strong their feelings might be on particular issues, never forget that they are Indians first, and that all differences must be resolved within the unalterable framework of one nation and one country. Let us make every endeavour to foster this feeling of oneness and to carry forward the work of national integration."

—**Lal Bahadur Shastri**
Prime Minister

Our way is straight and clear—to build a strong India with freedom and prosperity for all.

Let us march together, work together as one nation, imbued with courage and determination, goodwill and tolerance.

JAI HIND

PRESERVE UNITY, PROTECT FREEDOM

6 issues each containing of with cover 24 pages

DA 64/177

TYPICAL METRIC PRICING UNITS FOR WHOLESALE TRANSACTIONS

Serial No.	Commodity	Metric Unit
(1)	**Gold**	10 grams (g)
(2)	**Grocery and Confectionery** Biscuits, sweetmeats, cardamoms. **Textiles and Textile Fibres** Cotton yarn, damaged and seconds cloth, raw silk, rayon silk yarn, raw wool, wool manufactures (when sold by weight). **Paints & Chemicals** Paint (if sold by weight), indigo, liquid chlorine. **Hides, Skins & Leather** Raw hides, leather (hides and skins). **Metals** Silver, aluminium sheets, strips and circles, copper and brass wires and utensils. **Miscellaneous** Tea, meat, camphor tablets, mica.	1 kilogram (kg)
(3)	**Grains and Pulses** Rice, wheat, jowar, arhar, moong, masur, gram. **Spices** Black pepper, mustard, chillies, dhania, dalchini, turmeric, betelnuts. **Plantation Products** Rubber, cashewnuts, cashew kernels, tobacco (raw and manufactured). **Forest Products** Lac and lac products, gums, myrobalans, galnuts, soapnuts. **Textiles & Textile Fibres** Raw jute, raw hemp, coir yarn. **Oils, Oilseeds & Oilcakes** Vegetable oil, oilseeds, oilcakes. **Non-Ferrous Metals** *Aluminium :* ingots, bars, blocks, slabs, billets. *Lead :* ingots, sheets and strips. *Copper :* ingots, blooms, slabs, cakes, tiles, bricks, billets, blisterbars and wirebars, rods, sections and pipes, plates, sheets and strips, circles. *Brass :* ingots, rods, sections, pipes, sheets, strips, circles. *Zinc :* ingots, sheets, strips. *Tin :* blocks. **Chemicals** Caustic soda, bleaching powder, glycerine, soaps, paper salt. **Others** Sugar, gur, ice, fish, sugarcane, vegetables, tamarind.	1 quintal (q) (100 kilograms)
(4)	**Minerals** Iron ore, manganese ore, bauxite, coal. **Iron & Steel** Pig iron, iron & steel manufactures, semis (billets for rerolling etc.)	one metric tonne (t) (1,000 kilograms)
(5)	Cloth (mill, handloom, silk rayon and woollen cloth)	1 metre (m)
(6)	Jute carpets, coir mats and mattings, sheet glass.	one square metre (m^2)
(7)	Timber.	one cubic metre (m^3)
(8)	Paints (when sold by measure), spirits.	one litre (l)

Weights

(1) In place of the present units of seer, pound, rattal, viss etc., use the kilogram.

(2) In place of the tola, use the gram or 10 grams.

(3) In place of maund or corresponding unit, use the quintal *i. e.*, 100 kg.

Capacity Measures

In place of seer or gallon or any other measure, use the litre.

Length Measures

(1) Use the metre in place of yard or foot and the centimetre in place of inch.

Square Measures

(1) Use the square metre in place of square yard or square foot, and square centimetre in place of square inch.

Cubic Measures

(1) Use the cubic metre in place of cubic yard or cubic foot and cubic centimetre in place of cubi inch.

Packaging

It is advantageous if sizes of packages correspond to series of commercial weights and measures prescribed.

These are: 50 kg, 20 kg, 10 kg, 5 kg, 2 kg, 1 kg, 500 g, 200 g, 100 g, 50 g, 20 g, 10 g, 5 g, 2 g, 1 g, and so on.

TYPICAL PRICING UNITS FOR RETAIL TRADE

Serial No.	Commodity	Metric Unit for Use
(1)	Foodgrains, cereals, pulses, spices, ghee, bread, vegetables, meat, fish, sweetmeats, tea, coffee, sugar, salt	1 kg
(2)	Oil for cooking	1 kg or 1 litre depending upon prevalent practice.
(3)	Fruits	1 kg or number depending upon prevalent practice.
(4)	Milk	1 litre
(5)	Cloth and related materials	1 metre
(6)	Prepackaged materials	Preferably sizes corresponding to series of commercial weights and measures.

Published by the Director, Publications Division, Ministry of Information and Broadcasting, Delhi and printed by the Manager, Government of India Press, Faridabad.
Registered with the Registrar of Newspapers for India under No. 977/58.